PITCH: 4.23mm
WIDTH: 2.4mm
TURN: 1
SCALE: 1:1
CUTTER: Ø 12.7mm

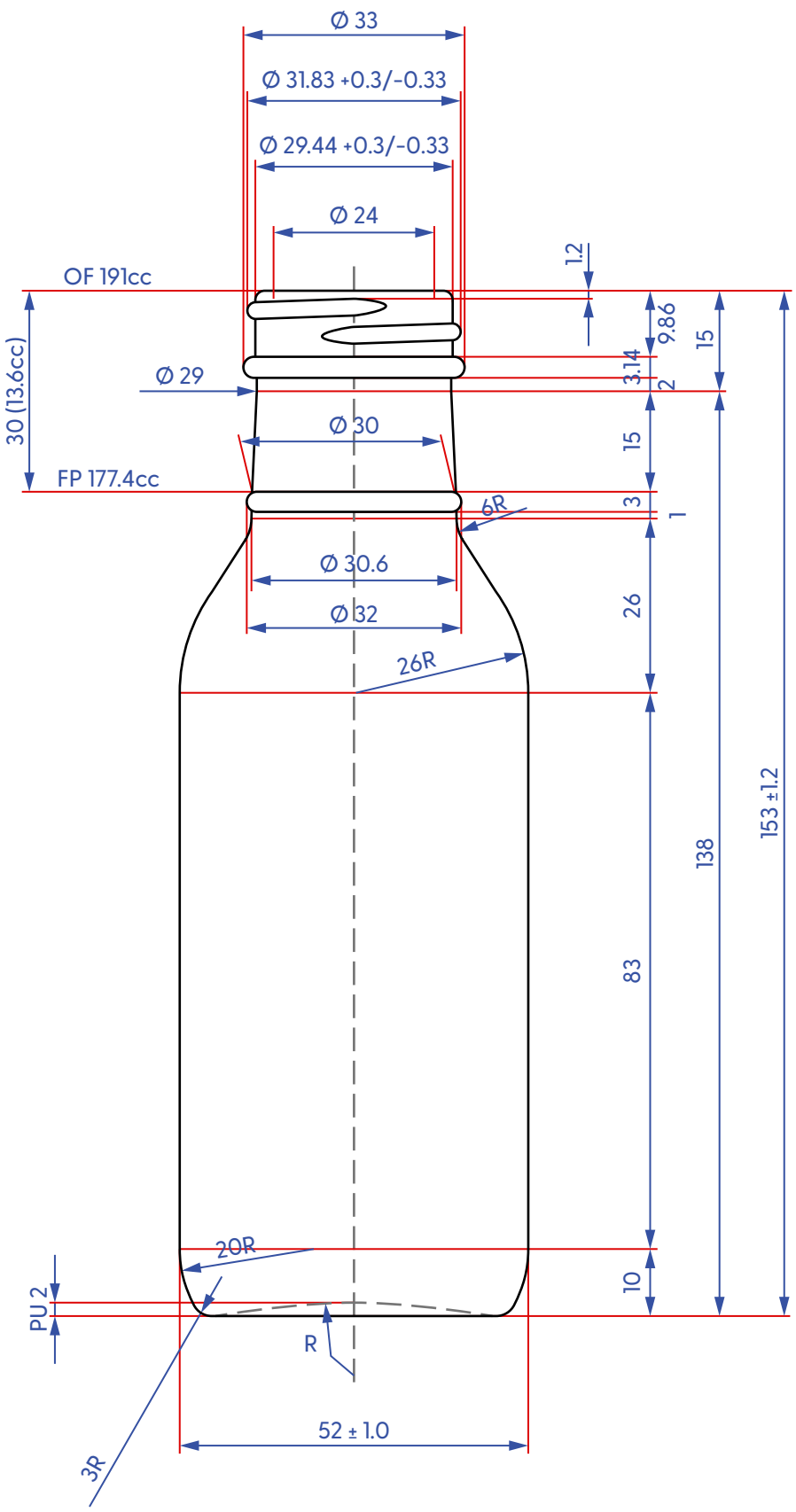

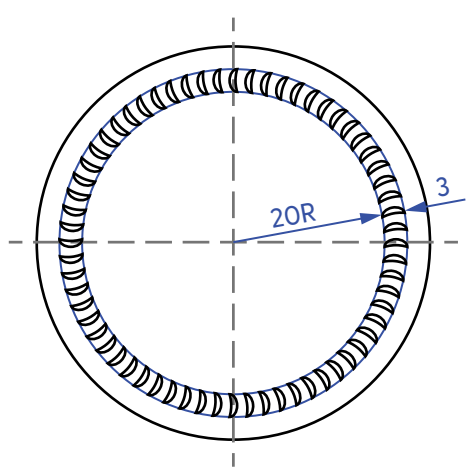

NAME	6oz RING NECK		
STYLE	15-060F		
WEIGHT	167.3 ± 10 g		
NET CAP	177.4 ± 4 ml		
O. FLOW CAP	191 ± 4 ml		
FILL POINT	30mm DOWN		
NECK SIZE / FINISH	33/400		
UNIT	mm	**SCALE**	1:1

LOS ANGELES
GENERAL BOTTLE
SUPPLY EST. 1929